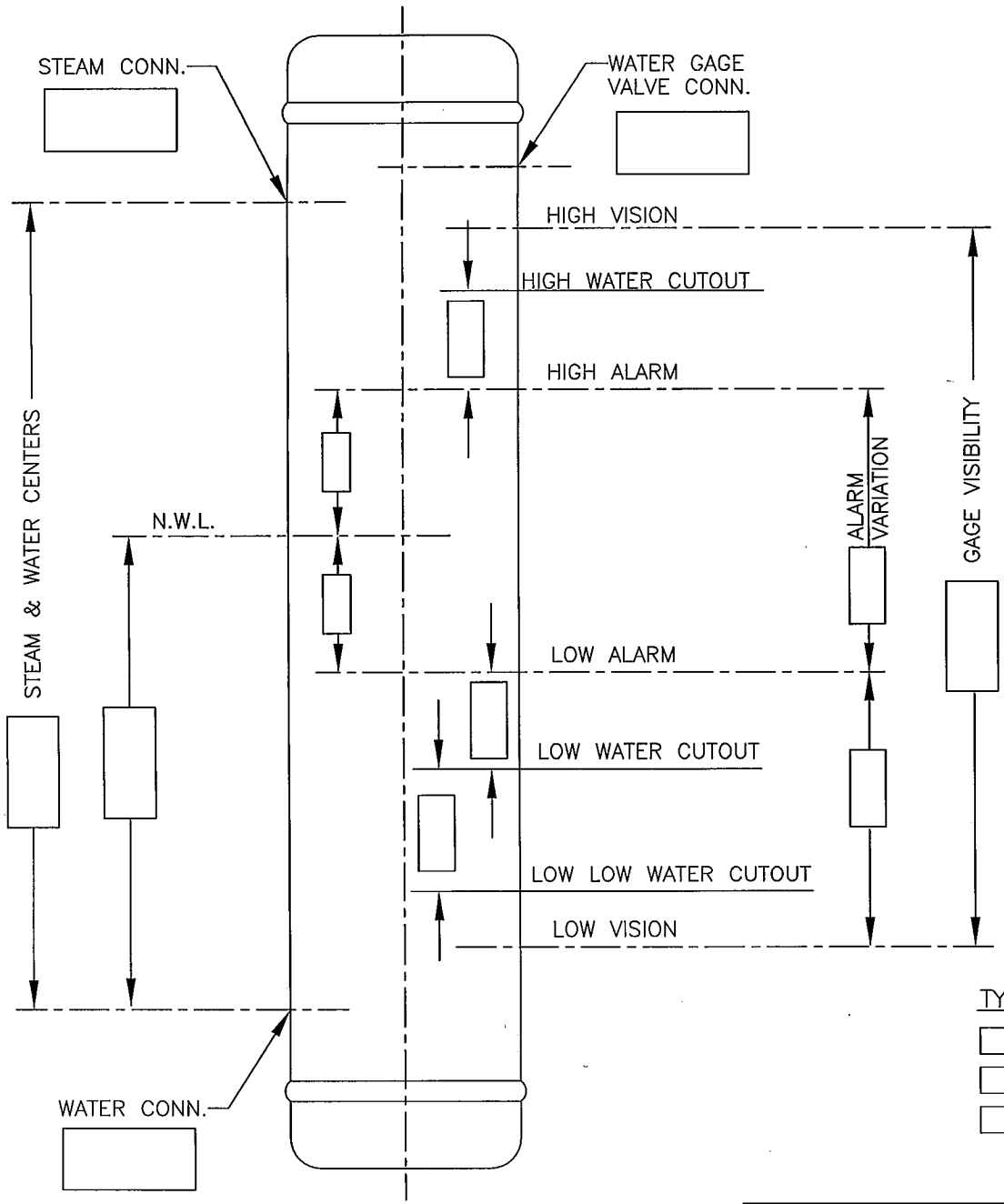

REQUIRED INFORMATION:

* STEAM & WATER CENTERS
  - SIZE AND TYPE OF CONNS.
* WATER GAGE VALVE CONNS. (SIZE AND TYPE)
  - WATER GAGE VISIBILITY (OR VALVE CENTERS IF EXISTING COLUMN)
* ALARM VARIATION AND PROBE FUNCTION LOCATIONS
* N.W.L. LOCATION
* SPECIFY FIGURE ARRANGEMENT FOR WATER COLUMN CONNS.

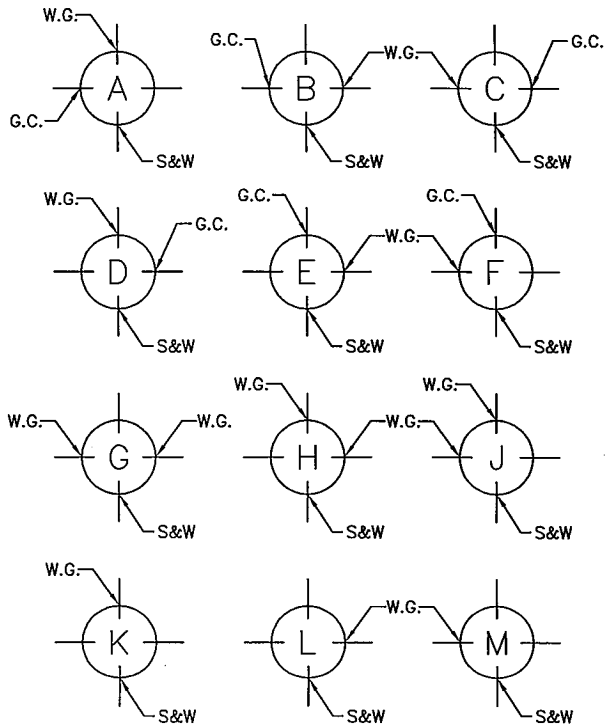

TYPE OF COLUMN REQUIRED:

- ☐ WHISTLE ALARM TYPE
- ☐ ELECTRODE ALARM TYPE
- ☐ NO ALARM TYPE
- ☐ DESIGN PRESSURE

W.G. = WATER GAGE VALVE CONNS.
S&W = STEAM AND WATER CONNS.
G.C. = GAGE COCK CONNS.

REV	DESCRIPTION	DATE	SIG
	REVISIONS		

UNLESS OTHERWISE NOTED
TOLERANCES (±)
DECIMAL & STOCK (.005)
FIN. FRACTIONAL (UP TO 1", NOT INCL.) (.010)
FIN. FRACTIONAL (1" INCL., UP TO 3") 1/64
FIN. FRACTIONAL (3" INCL., UP TO 6") 1/32
FIN. FRACTIONAL (6" INCL., UP TO 12") 1/16
FIN. FRACTIONAL (12" & OVER) 1/8
ANGLES 1°
MACHINE FINISH- 125 √ OR SMOOTHER
REMOVE BURRS AND SHARP EDGES

THE CLARK-RELIANCE CORP.
STRONGSVILLE, OHIO

FORGED STEEL
WATER COLUMN
6 PROBE DATA SHEET

MATERIAL
DRAWN FAS | SCALE NONE
CHKD. | DATE 8-2-96
DRAWING NO. E040-C
REV.